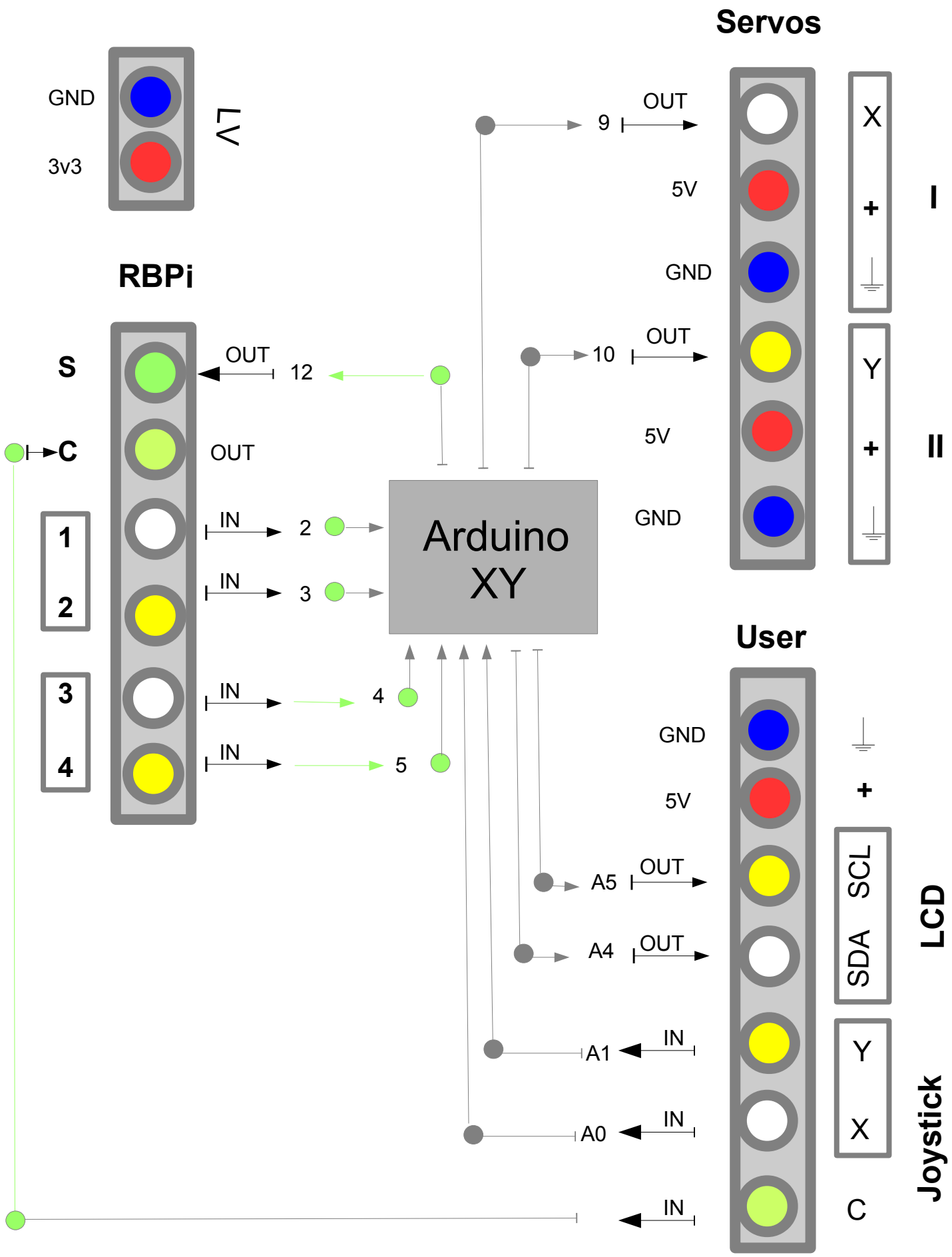
Servos
GND
3v3
LV
OUT
9
5V
GND
OUT
10
5V
GND
X
+
I
Y
+
II
RBPi
S
OUT
12
C
OUT
1
2
IN
2
IN
3
3
4
IN
4
IN
5
Arduino
XY
User
GND
5V
OUT
A5
OUT
A4
IN
A1
IN
A0
IN
C
+
SCL
SDA
LCD
Y
X
Joystick